INN-A3-MODD0808ETN digital NPN input and output module

2026-05-06 | V1.0.2

Contents

1. Document Description 1 1
1.1 Compliance with standards 1 1
1.2 Version Revision History 1 1
1.3 Warranty Description 1 1
1.4 Safety Precautions 2 2
1.4.1 Safety Instructions 2 2
1.4.2 Security Level 2 3
2. Product Information 5 8
2.1 Naming rules and nameplate description 5 8
2.2 Component Description 7 9
2.3 Technical Specifications 8 10
2.3.1 Power supply specifications 8 10
2.3.2 Input specifications 9 11
2.3.3 Output specifications 10 12
2.4 Interface Definition and terminal wiring 11 13
2.4.1 Interface Definition 11 13
2.4.2 Terminal Wiring 12 14
2.5 Environmental scope13 15
3. Dimensions and installation 14 16
3.1 Module Dimensions 14 16
3.2 Equipment installation 14 16
3.2.1 Installation 14 16
3.2.2 Disassembly 16 18
3.3 Electrical Installation 17 19
4. Programming Example 18 21

1 Document Description

INN-A3-MODDO808ETN digital NPN input and output module, this product has 8 digital inputs and 8 digital output channels, supports NPN input and output, and is suitable for INNOCTRL A-class series Coupler modules.

1.1 Applicable Standards

Table 1 Certification standards1

Certification name	Command name		Applicable Standards
CE certification	EMC directive	2014/30/EU	• EN 61131-2
	LVD instruction	2014/35/EU	• EN 61010-1 • EN 61010-2-201

1.2 Version Revision History

Table 2 version revision record2

Revision date	release version	Change history
2025/07/03	V1.0.0	initial version
2025/09/10	V1.0.1	Updated programming examples
2026/05/06	V1.0.2	Updated programming examples

1.3 Warranty Description

Under normal use, if the product fails or is damaged, Zhejiang Visual Intelligent Technology Co., Ltd. provides warranty services within the warranty period (please refer to the order form for details of the product warranty period). After the warranty period, repair fees

will be charged.

During the warranty period, if the product is damaged due to the following conditions, repair fees will be charged.

1) Failure to operate this product according to the regulations in this manual may result in damage to the product.

2) Product damage caused by fire, flood, voltage abnormality.

3) Product damage caused by using this product for abnormal functions.

4) Product damage caused by exceeding the specified use range of the product.

5) Secondary damage to the product caused by force majeure (natural disasters, earthquakes, lightning strikes).

The relevant service fees are calculated according to the manufacturer's unified standards. If there is a contract, the contract priority will be used.

Please refer to the "Product Warranty Card" for detailed warranty instructions.

1.4 Safety Precautions

1.4.1 Safety Instructions

When installing, operating, and maintaining the product, please read and comply with the following safety precautions:

- To ensure personal and equipment safety, please follow all safety precautions marked on the product and described in this manual when installing, operating, and maintaining the product.
- The "Caution", "Warning" and "Danger" items in this manual do not represent all the safety precautions that should be observed, but are only supplementary to all safety precautions.
- This product should be used in an environment that meets the design specifications, otherwise it may cause malfunctions. Functional abnormalities or component damage caused by failure to comply with relevant regulations are not covered

by the product quality guarantee.

- Our company will not bear any legal responsibility for personal safety accidents, property losses, etc. caused by illegal operation of products.

1.4.2 Security level

This manual will indicate the user's safety level into three categories: danger, warning, and caution.

DANGER⚠
Indicates that death or serious bodily injury may result if instructions are not followed.

⚠ WARNING
Indicates that death or serious bodily injury may result if instructions are not followed.

⚠ CAUTION
Indicates that minor bodily injury or equipment damage may result if operations are not carried out as specified.

Please keep this manual in a safe place for reading when necessary, and be sure to give this manual to the end user.

1.4.2.1 When designing the control system

When designing a control system, please read and follow the following safety precautions:

⚠ DANGER
• Please be sure to design a safety circuit to ensure that the control

system can still work safely when the external power supply fails or the programmable controller fails;

- When the rated load current is exceeded or the load is short-circuited, causing overcurrent for a long time, the module may smoke or catch fire. Safety devices such as fuses or circuit breakers should be installed externally.

⚠ WARNING

- Please be sure to set up emergency braking circuits, protection circuits, interlock circuits for forward and reverse operations, and position upper and lower limit interlock switches to prevent machine damage in the external circuit of the programmable controller;
- In order to ensure the safe operation of the equipment, please design external protection circuits and safety mechanisms for output signals related to major accidents; the programmable controller CPU may shut down all outputs after detecting an abnormality in its own system; when part of the controller's circuit fails, its output may be uncontrolled. To ensure normal operation, it is necessary to design an appropriate external control circuit;
- When the output units such as relays and transistors of the programmable controller are damaged, the output cannot be controlled to ON or OFF state;
- Programmable controllers are designed to be used in indoor, overvoltage level II electrical environments. The power supply system level should have lightning protection devices to ensure that lightning overvoltage is not applied to the power input end or signal input end, control output end and other ports of the programmable controller to avoid damage to the equipment.

1.4.2.2 When installing

When installing the device, please read and follow the following safety precautions:

⚠ WARNING

- Only professional maintenance personnel who have received relevant training on electrical equipment and have sufficient electrical knowledge can install this product;
- When disassembling or installing a module, all external power supplies used by the system must be disconnected before proceeding. If the power is not completely disconnected, it may cause electric shock or module failure or malfunction;
- Do not use the programmable controller in the following places: places with dust, oil fumes, conductive dust, corrosive gases, and flammable gases; places exposed to high temperatures, condensation, wind and rain; places with vibrations and shocks. Electric shock, fire, and misoperation can also cause product damage and deterioration;
- The programmable controller is an Open type device. Please install it in a control cabinet with a door lock (control cabinet shell protection > IP20). Only operators who have received relevant training on electrical equipment and have sufficient electrical knowledge can open the control cabinet.

⚠ CAUTION

- When installing, avoid metal shavings and wire ends from falling into the ventilation holes of the controller, which may cause fire, malfunction, and misoperation;
- After installation, make sure there are no foreign objects on the ventilation surface, otherwise it may cause poor heat dissipation, causing fire, malfunction, and misoperation;
- When installing, they should be tightly connected to their respective connectors and the module connection hooks should be locked firmly. If the module is installed improperly, it may cause malfunction, malfunction, and falling off.

1.4.2.3 When wiring

When wiring, please read and follow the following safety precautions:

⚠ DANGER

- Only professional maintenance personnel who have received relevant training on electrical equipment and have sufficient electrical knowledge can perform wiring on this product;
- During wiring work, all external power supplies used by the system must be disconnected before proceeding. If all are not disconnected, it may cause electric shock or equipment failure or malfunction;
- Cable terminals should be well insulated to ensure that the insulation distance between cables will not be reduced after the cables are installed on the terminal block. Otherwise it may cause electric shock or equipment damage.

⚠ CAUTION

- To avoid electric shock, please cut off the power supply before connecting this product;
- Please refer to the data in the technical specifications for the input power supply specifications of this product. Please provide the power supply strictly in accordance with the data in the technical specifications. If the power supplied is not within the required range, the product will be seriously damaged. Therefore, please regularly check whether the DC power provided by the switching power supply is stable.

1.4.2.4 During operation and maintenance

When operating and maintaining the equipment, please read and comply with the following safety precautions:

⚠ CAUTION
• Only professional maintenance personnel who have received relevant training on electrical equipment and have sufficient electrical knowledge can operate and maintain the product; • Do not touch the terminals when the power is on, otherwise it may cause electric shock or malfunction; • When disassembling modules or connecting or removing communication cables, all external power supplies used by the system must be disconnected first. Failure to disconnect them all may result in electric shock or malfunction.

1.4.2.5 When scrapped

When scrapping your equipment, please read and follow the following safety precautions:

⚠ CAUTION
• Please treat it as industrial waste; when discarding batteries, they should be disposed of separately in accordance with the laws and regulations established by each region; • Scrapped equipment and products should be processed and recycled according to industrial waste treatment standards to avoid environmental pollution.

2 product information

2.1 Naming rules and nameplate instructions

INN-A 3-MODD 08 08 ETN

① ② ③ ④ ⑤ ⑥ ⑦

Table 3 Naming rules table3

No.	Description
①	Product range INNOCTRL
②	Module classification level: A-series
③	Product generation: 3, third generation product
④	Module classification: ● MODD, digital module ● CPL, Coupler ● MODA, analog module ● MODS, serial port module ● ASSY, attachment
⑤	Number of input channels: 08, 8 input channels
⑥	Number of output channels: 08, 8 output channels
⑦	● E: Logical expansion module ● TN: NPN output module

2.2 Component Description

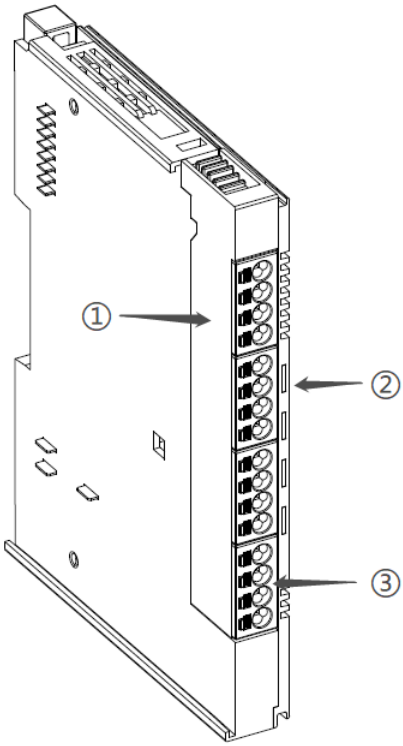

Figure 1 Component diagram1

As shown in the figure above, the component mainly consists of three parts. See the table below for detailed description:

Table 4 Component description table4

No.	Description
①	Pluggable terminal box
②	Module indicator light
③	Replaceable integrated light guide terminal

2.3 Technical Specifications

2.3.1 Power specifications

Table 5 Power supply specification table5

Item		Specification
bus powered	Voltage	Typical value 5V DC
	Current	Typical value 200mA
On-site power supply	Voltage	24V DC
	Current	Typical value 50mA+load

2.3.2 Enter specifications

Table 6 Input specification table6

Item	Specification
input type	digital input
Input method	NPN type
Input channel	8
Input voltage level	24V DC±10%
Input current (typ)	4mA (typ. at 24V)
ON voltage	>15V DC
OFF voltage	<5V DC
Hardware response time	ON/OFF 20us/20us
Software filter time	Supported
Input impedance reference value	6.5k~6.7k
Input action display	When the input is in the driving state, the input indicator light is on (software control)

2.3.3 Output specifications

Table 7 Output specification table7

Item	Specification
Output type	Digital output, transistor low-side output
Output mode	NPN type
Output channel	8
Output voltage level	24V DC±10%
Load type	Resistive load, inductive load, lamp load
Maximum output current	0.5A/point, 6A/module
Hardware response time	ON/OFF 60us/60us
Leakage current when OFF	50uA
switching frequency	Resistive load 100Hz, inductive load 0.5Hz, lamp load 10Hz
Output action display	When the output is in the driving state, the output indicator light is on (software control)
protection function	Short circuit protection, overcurrent protection

2.4 Interface Definition and terminal wiring

2.4.1 Interface Definition

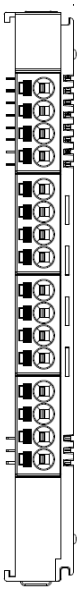

Figure 2 Interface diagram2

The interface is shown in the figure above, and the interface slots and definitions are shown in the table below:

Table 8 Interface Definition table8

slot	No.	definition
SLOT1	1	DI1
	2	DI2
	3	DI3
	4	DI4
SLOT2	1	DI5
	2	DI6
	3	DI7

	4	DI8
SLOT3	1	DO1
	2	DO2
	3	DO3
	4	DO4
SLOT4	1	DO5
	2	DO6
	3	DO7
	4	DO8

2.4.2 Terminal Wiring

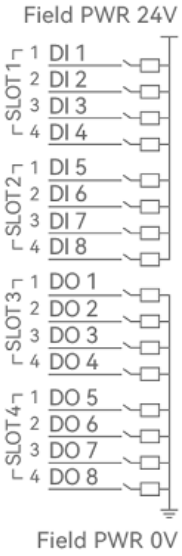

Figure 3 terminal wiring diagram3

2.5 Environmental scope

Table 9 Environmental requirements table9

Item	Specification
Working environment temperature	0～55℃
Working environment humidity	10%～90%RH, no condensation
Usage environment	No corrosive, flammable gas, conductive dust (dust), not serious occasions
Ambient storage temperature	-25～85℃
altitude	≤2000m
Immunity	Power cord 2kV (IEC 61000-4-4)
Overvoltage category	I
EMC anti-interference level	Zone B, IEC61131-2

3 Dimensions and installation

3.1 Module Dimensions

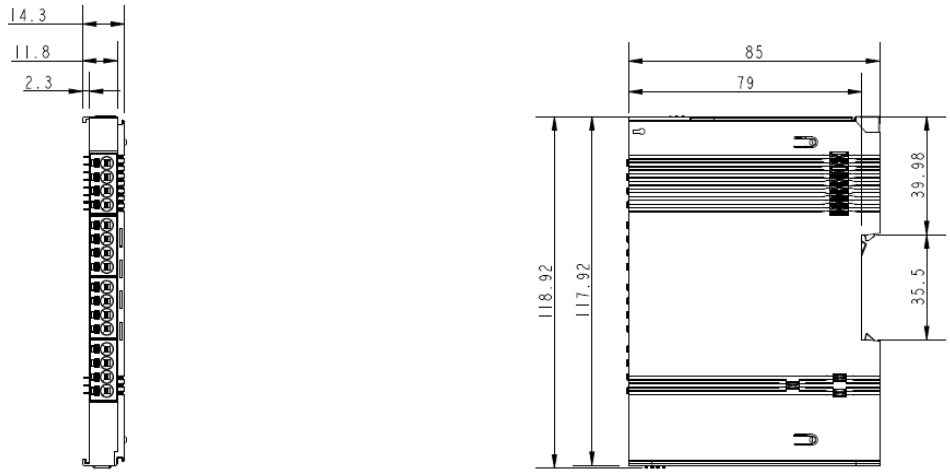

Figure 4 Module Dimensions diagram4

3.2 Equipment installation

3.2.1 Installation

The module is installed on a DIN rail. The DIN rail must comply with the IEC 60715 standard (35mm wide, 1mm thick). The size information is as shown in the figure below, in millimeters (mm):

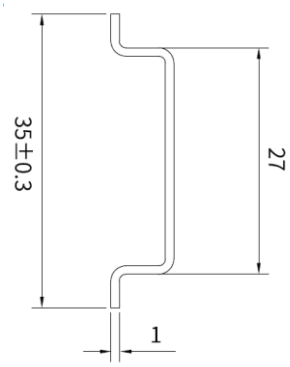

Figure 5 DIN rail diagram5

⚠ CAUTION
If the module is installed on a DIN rail other than those recommended

above, the DIN rail buckle may not lock properly.

The assembly between I/O modules is carried out by sliding installation through the top and bottom guide rails of the module, as shown in the figure below.

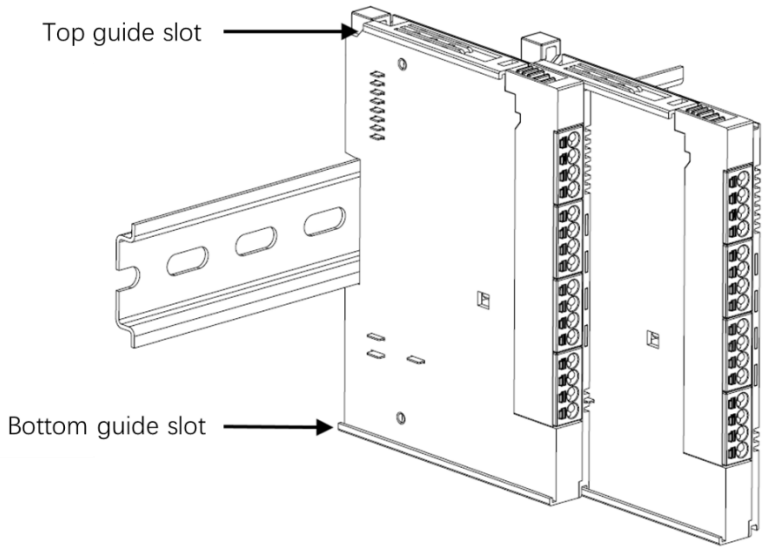

Figure 6 Schematic diagram of I/O module guide slot6

As shown in the figure below, when installing, align the module with the DIN rail and press the module in the direction shown by arrow ① so that the module snaps onto the DIN rail. After the installation is in place, press the protruding guide rail part at the top in the direction shown by arrow ②. When you hear a snapping sound, the installation is complete.

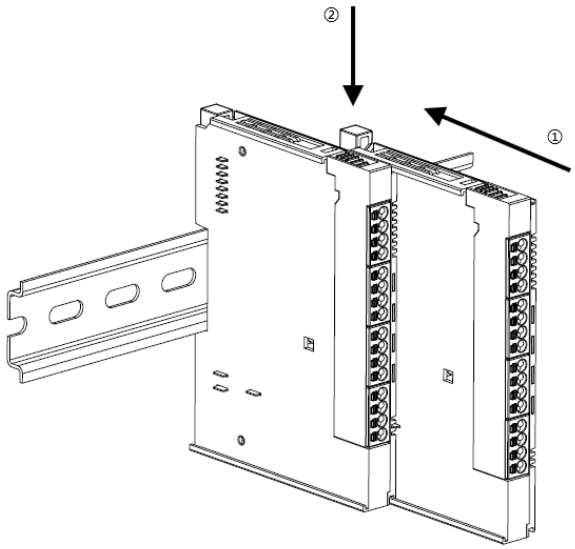

Figure 7 I/O module installation diagram7

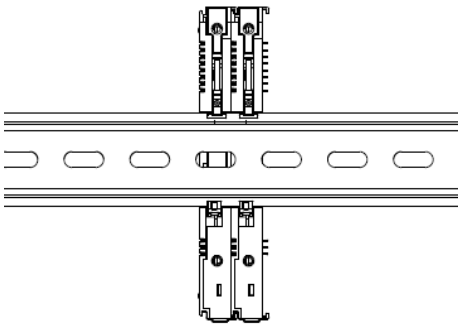

Figure 8 Schematic diagram of DIN rail buckle8

3.2.2 Disassembly

As shown in the figure below, use a flat-blade screwdriver or similar tool to pry up the rail lock, and pull the module straight forward at the buckle position (the raised part). When completed, press down on the top of the lock.

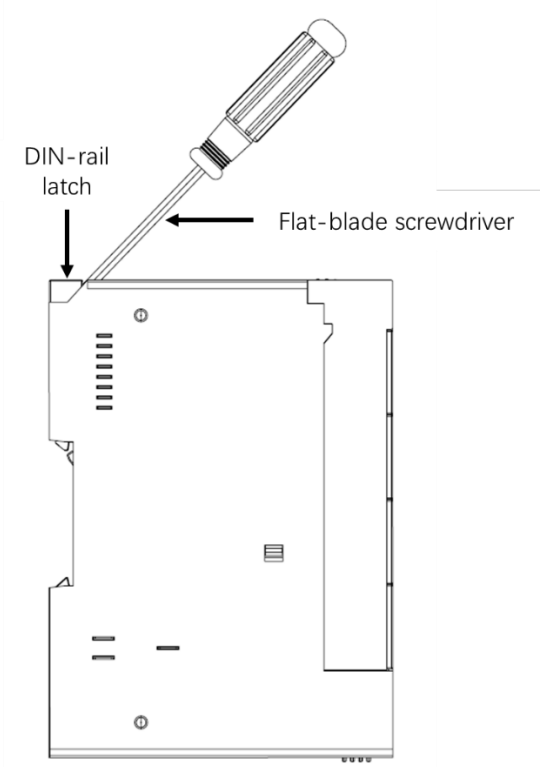

Figure 9 Schematic diagram of prying the guide rail lock9

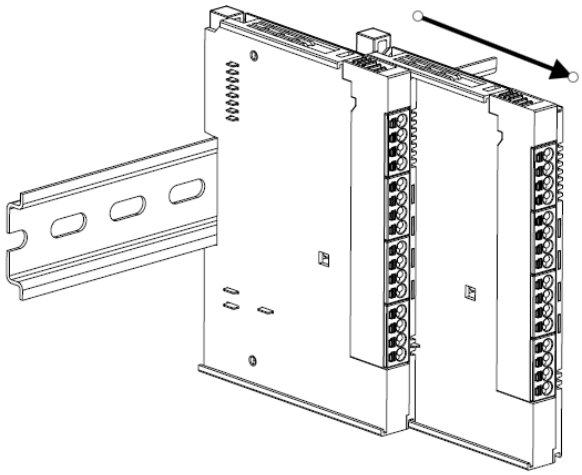

Figure 10 Schematic diagram of pulling out the I/O module10

3.3 Electrical Installation

The following table shows the selection and installation specifications of cables and tube terminals:

Table 10 Cable and tube terminal specifications10

Supporting material name	Adaptable wire diameter		Tube type terminal
	mm²	AWG	Specification
Tubular wire lug	0.75	18	E7508
	1.0	17	E1008
	1.5	15	E1508

4 Programming Examples

This section uses CODESYS as a programming tool to demonstrate the use of the INN-A3-MODD0808ETN digital NPN input and output module. The steps are as follows:

1) In the CODESYS menu bar, click "Tools" and select "Device Repository".

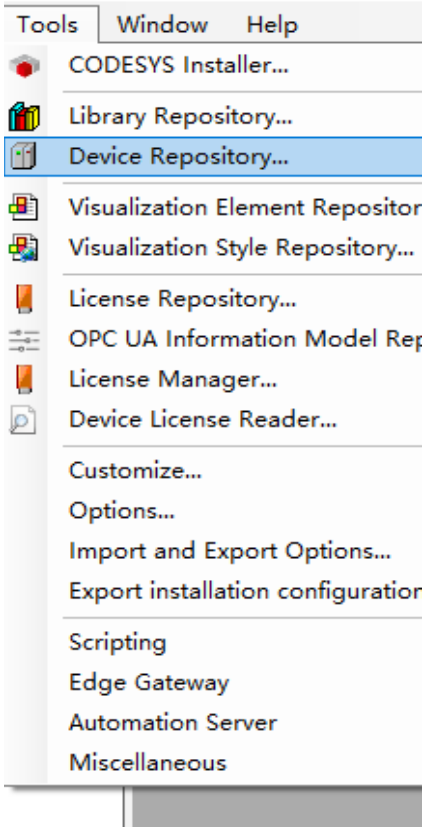

Figure 11 Tool menu drop-down box11

2) Store the device's .xml file and .bmp icon file in the same local directory. In the "Device Repository" window interface, click "Install", select the provided .xml format file and open it. After receiving the prompt "The relevant device has been installed in the device repository", click "Close".

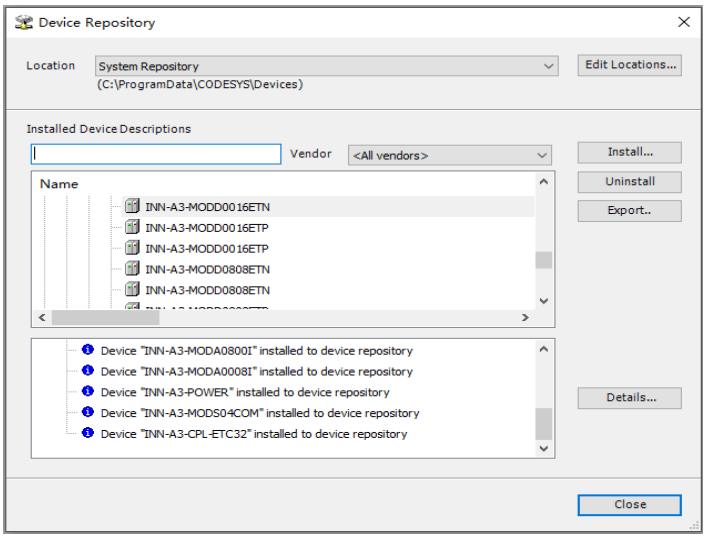

Figure 12 Installing the device into the device repository12

3) In the "Device" window on the left side of CODESYS, right-click "Add Device" on "CODESYS_Control_Win_v3_x64", then click "EtherCAT Master" and "Add Device" in order to successfully add the device. When finished, just close the window.

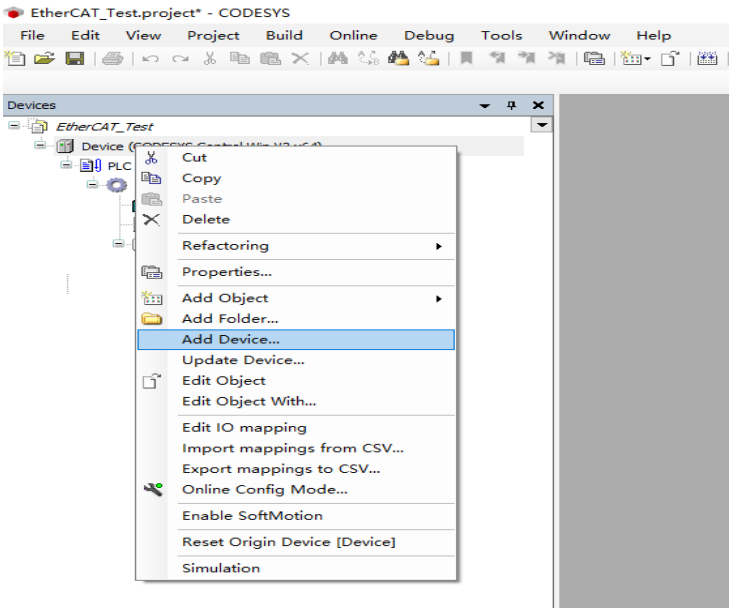

Figure 13 Device window13

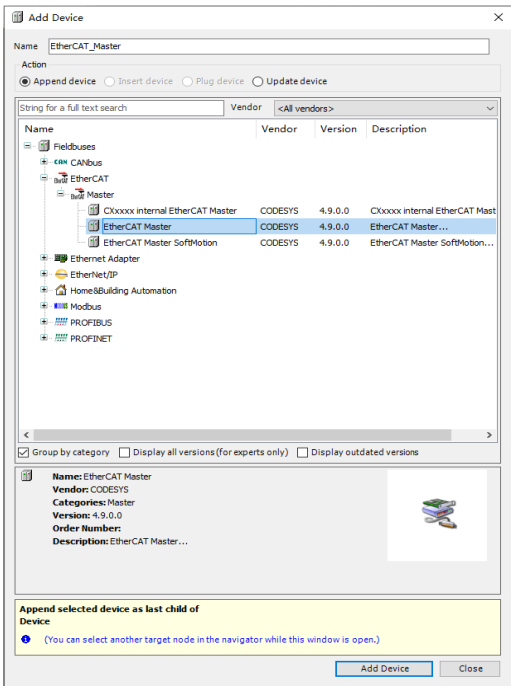

Figure 14 Add device14

4) Add corresponding Couplers and I/O modules based on existing modules.

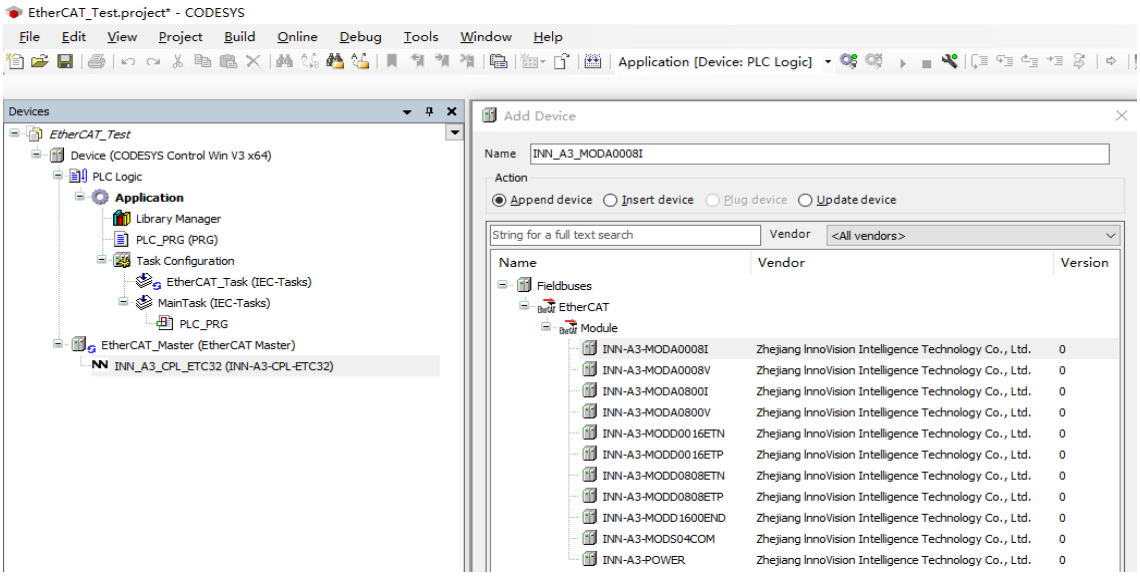

Figure 15 Add Coupler and I/O module15

5) Write code and create variables.

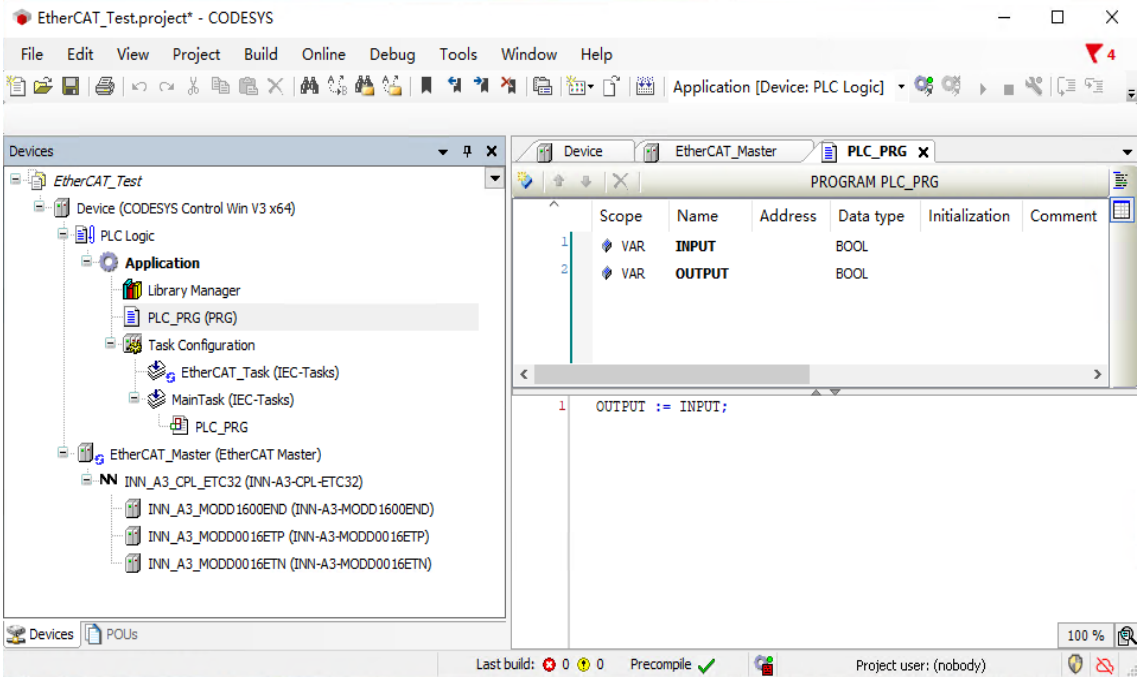

Figure 16 Code window16

6) Associate variables with I/O modules.

⚠ CAUTION

The err_code in the input mapping indicates the abnormal status of the I/O module, and the running_number indicates the rolling sequence number of the abnormal status information. Among them, the value of err_code is described as follows:

- When err_code is 0, it means normal.
- When err_code is 1, it indicates overcurrent and overtemperature abnormality. At this time, all output channels are turned off, and the second indicator light STS changes from solid green to solid yellow. It can only be restored to normal status by restarting the cold start.

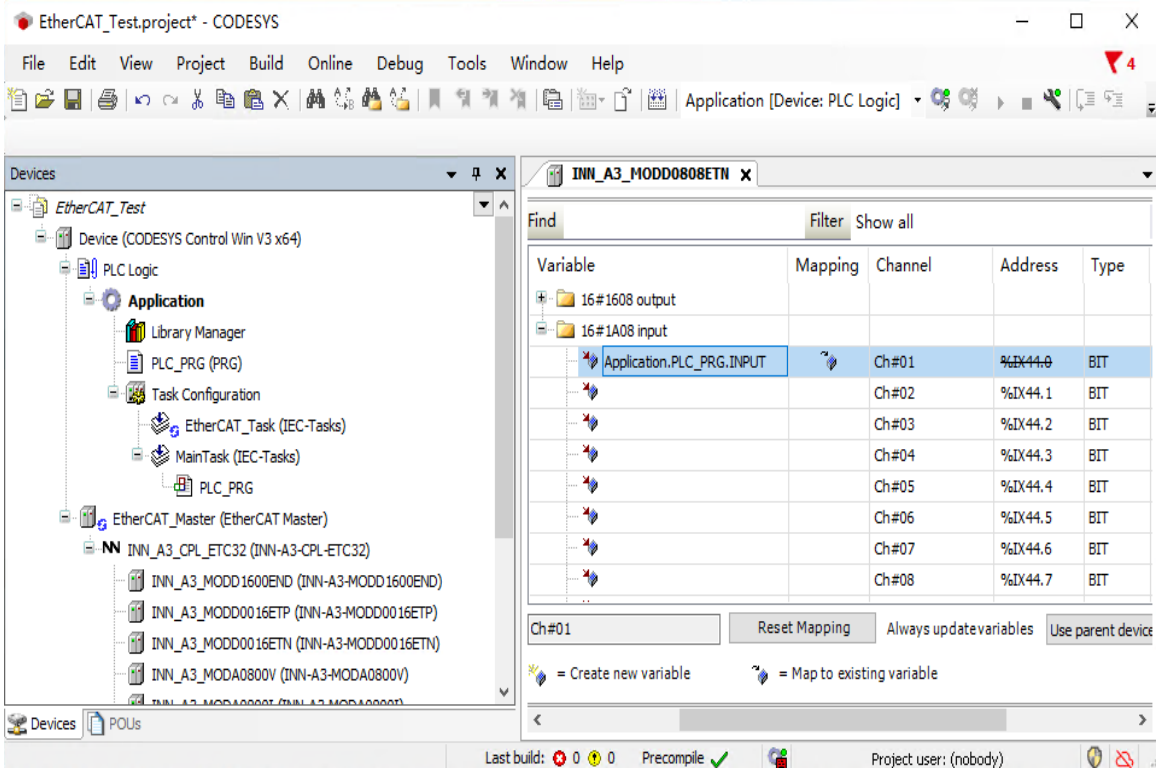

Figure 17 Set input mapping17

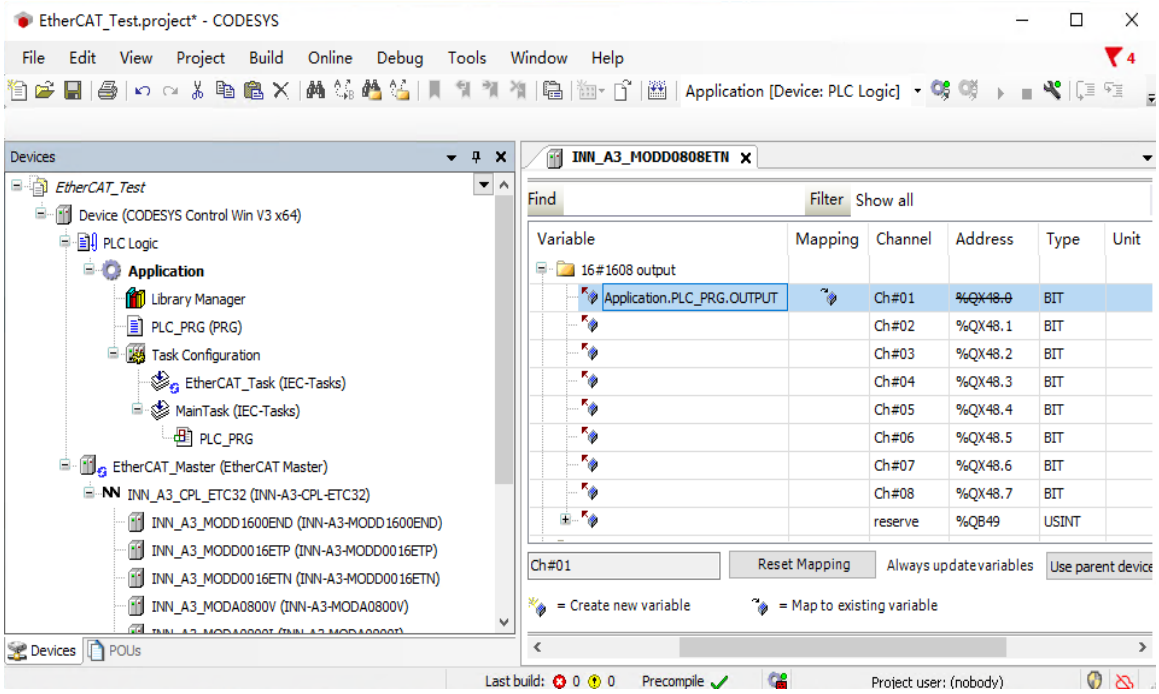

Figure 18 Set output mapping18

For more information, please visit INNOCTRL official website:

www.innoctrl.com

Kaihua County, Quzhou City, Zhejiang Province
Room 102, Comprehensive Building, No. 3 Taikang Road, Economic Developme

sales@innoctrl.com
www.innoctrl.com